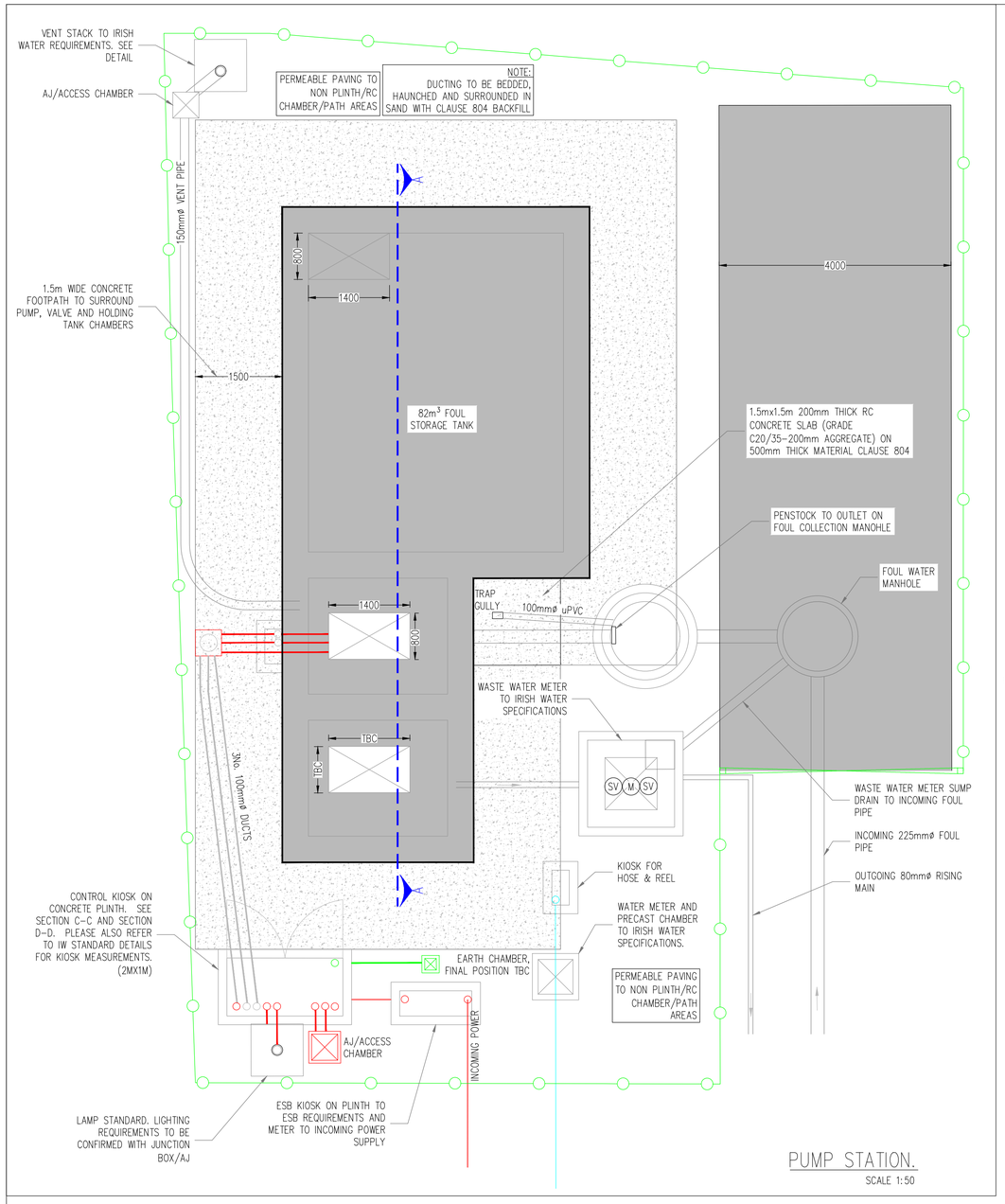

PUMP STATION.
SCALE 1:50

NOTE:

1. ALL PUMPING STATION PIPE WORK, FITTINGS AND VALVES ETC. TO BE ALL FLANGED DUCTILE IRON IS EN 598 WITH PN-16 FLANGES TO BE EN 1092-1.
2. ALL PUMP, VALVE AND TANK COVERS TO BE D400 LOCKABLE SEALED COVERS FLUSH WITH ROOF SLAB.
3. STEEL REINFORCEMENT TO BE 70Kg/m³ TO BS EN4449
4. PUMPS TO BE DUTY/STANDBY ARRANGEMENT.
5. CONCRETE TO GRADE C30/37 TO IS EN 206

ABBREVIATIONS

SV	SLUICE VALVE
NRV	NON RETURN VALVE
BC	BAUER CONNECTION
DP	DISTANCE PIECE
RT	RADIAL TEE
LR	LONG RADIUS BEND
TEE	TEE
90°	90° BEND
PF	PUDDLE FLANGE
PUMP	SPEC REQ'D

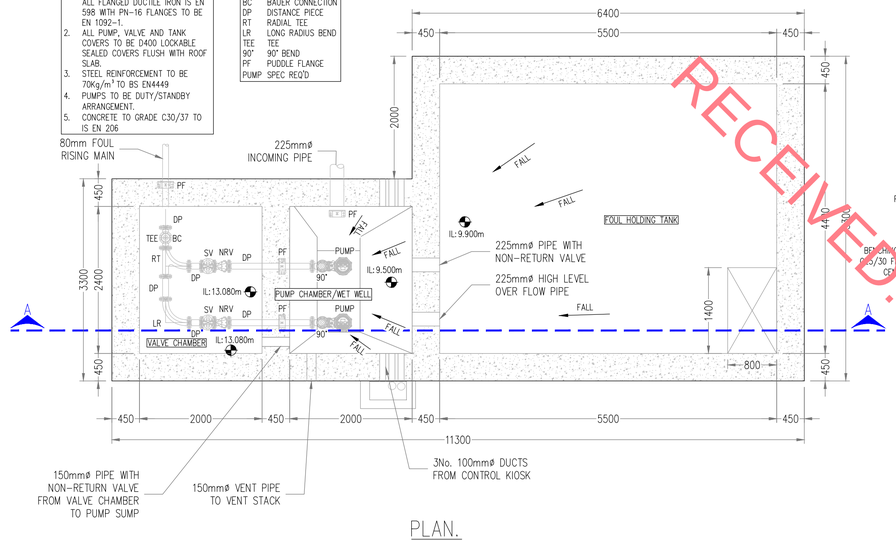

PLAN.
SCALE 1:50

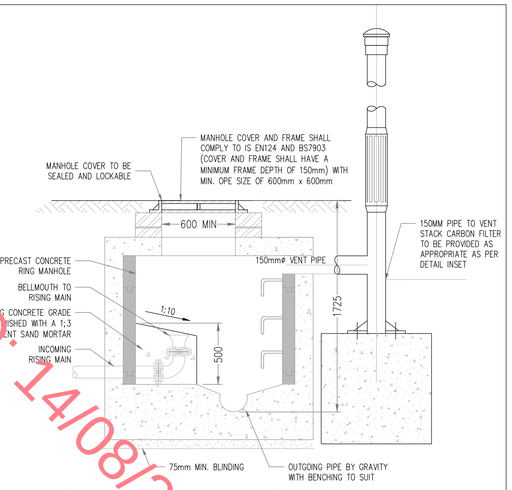

STAND-OFF MANHOLE DETAIL.
SCALE 1:25

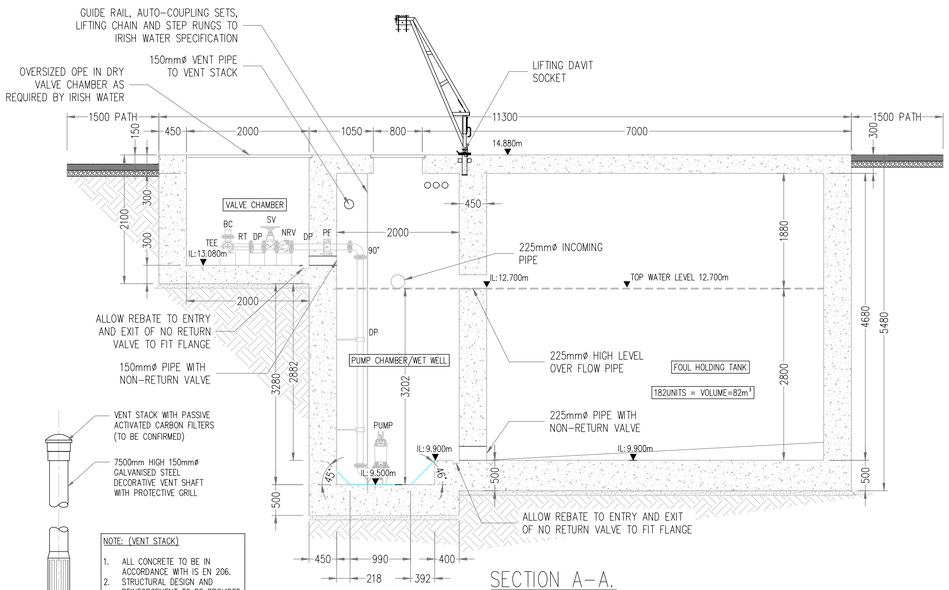

SECTION A-A.
SCALE 1:50

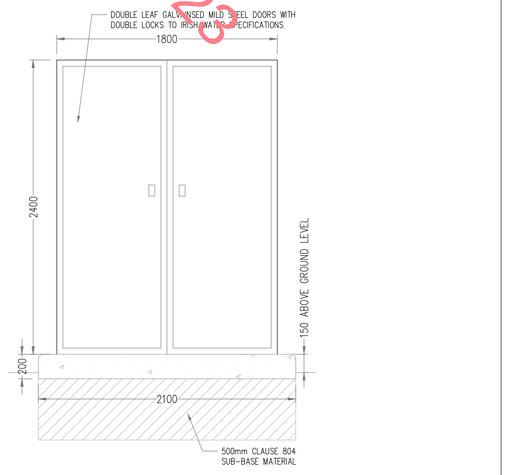

CONTROL KIOSK (SECTION C-C).
SCALE 1:25

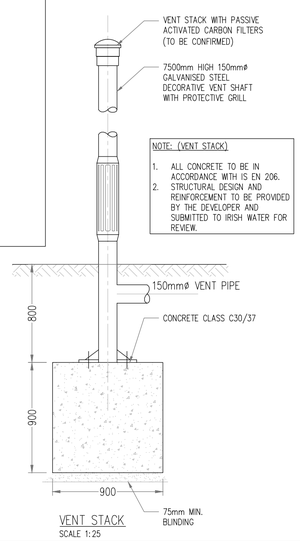

NOTE: (VENT STACK)

1. ALL CONCRETE TO BE IN ACCORDANCE WITH IS EN 206.
2. STRUCTURAL DESIGN AND REINFORCEMENT TO BE PROVIDED BY THE DEVELOPER AND SUBMITTED TO IRISH WATER FOR REVIEW.

VENT STACK
SCALE 1:25

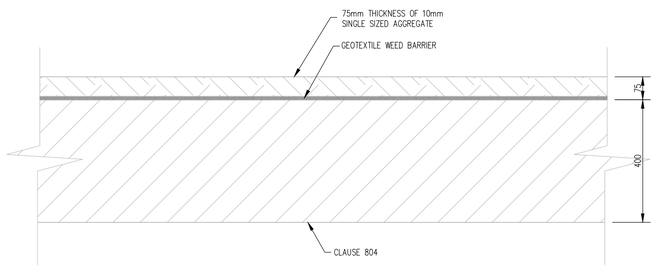

PERMEABLE PAVING DETAIL
SCALE 1:20

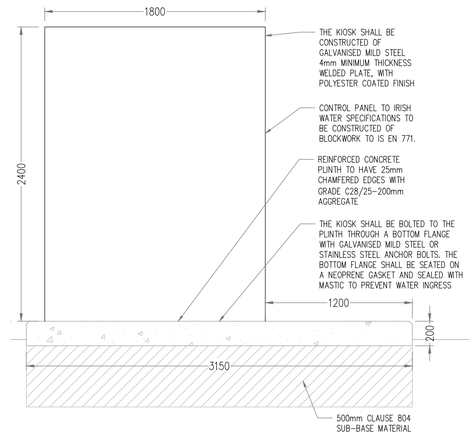

CONTROL KIOSK (SECTION D-D).
SCALE 1:25

A034

NOTES:

1. ALL DIMENSIONS ARE IN MILLIMETRES UNLESS OTHERWISE NOTED.
2. PUMPS SHALL BE INSTALLED TO SUPPLIER'S REQUIREMENTS.
3. ALL DUCTILE IRON PIPE WORK AND FITTINGS TO BE IN ACCORDANCE WITH IS EN 598.
4. PRE-CAST CONCRETE CHAMBERS MAY BE USED SUBJECT TO APPROVAL FROM THE ENGINEER. .
5. ALL GATE VALVES TO BE CLOCKWISE CLOSING.
6. WET WELL TO BE IN ACCORDANCE WITH BS EN 1992-3.
7. COVERS TO BE SIZED TO ALLOW ADEQUATE SPACE FOR PUMP REMOVAL. MINIMUM 1400x800mm.
8. CHAMBER COVERS WITH A CLEAR OPENING EXCEEDING 1000mm SHALL CONFORM TO BS 9124.
9. ALL MANHOLE COVERS TO HAVE DOUBLE SEALED SPECIFICATION.
10. ALL CONCRETE TO BE IN ACCORDANCE WITH IS EN 206.
11. VENTILATION STACK TO BE PROVIDED.
12. ALL INTERNAL VALVES AND FITTINGS TO BE TO SPECIALIST DESIGN AND SUBJECT TO APPROVAL BY ENGINEERS.

PUMP SPECIFICATION

1. DUTY & STANDBY PUMP ARRANGEMENT
2. EACH PUMP TO BE FITTED WITH MACERATOR
3. PUMPS SET TO DISCHARGE AT 2.5 l/s
4. LENGTH OF RISING MAIN = 220m (Approx)
5. PUMPING HEAD = 9.1m (Excl FRICTION LOSS)

RECEIVED: 14/08/2023

PLANNING DRAWING.
NOT FOR CONSTRUCTION.
ALL LEVELS GIVEN ARE RELATIVE TO ORDNANCE DATUM.
THIS DRAWING HAS BEEN ISSUED FOR INFORMATION PURPOSES ONLY AND MUST NOT BE USED FOR CONSTRUCTION UNDER ANY CIRCUMSTANCES

NOTES

1. For setting out refer to Architect's drawings.
2. This drawing to be read in conjunction with all other Architectural and Engineering drawings and all other relevant drawings and Specifications.
3. DO NOT SCALE THIS DRAWING. Use figured dimensions only.
4. No part of this document may be reproduced or transmitted in any form or stored in any retrieval system of any nature without the written permission as copyright holder except as agreed for use on the project for which the document was originally issued.
5. Ordnance Survey Ireland Licence Number EN 0074023

Rev. No.	Date	REVISION NOTE	Drn. By	Chkd. By
P1	12.12.2022	ISSUED FOR PLANNING	SC	NB
P2	02.06.2023	UPDATED TO SITE PLAN	JF	NB
P3	16.06.2023	ISSUED FOR PLANNING	SC	NB
P4	09.08.2023	ISSUED FOR PLANNING	SC	NB

Client	Keldrum Limited
Project	Large-scale Residential Development at Tinakilly, Wicklow
Title	Foul Pump Station
Dwg. No.	A034-CSC-ZZ-XX-DR-C-0019

Date	Drn by	Chkd by	Aprvd by	Scale	Revision
Oct 2022	SC	NB	OS	AS SHOWN @ A1	P4

CS Consulting Group
DUBLIN | LONDON | LIMERICK
Head Office
19-22 Dame Street, Dublin 2.
T: +353 (0)1 5480863
e: info@csconsulting.ie
w: www.csconsulting.ie

NSAI Certified
Quality I.S. EN ISO 9001:2008
Environment I.S. EN ISO 14001:2004
Energy I.S. EN ISO 50001:2011
Health & Safety OHSAS 18001:2007